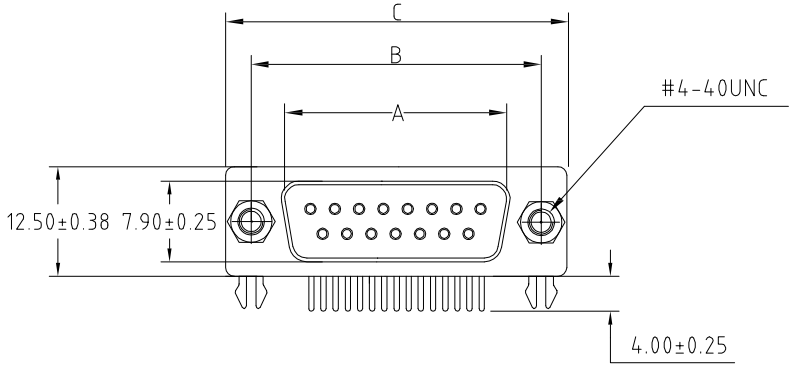

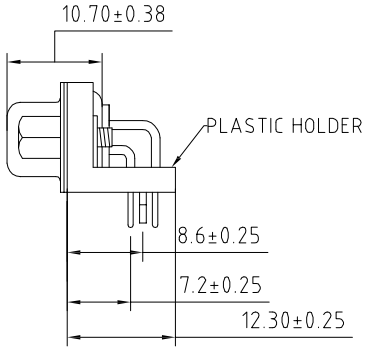

No. of Contact	A ±0.25 ±.010	B ±0.13 ±.005	C ±0.38 ±.015	D ±0.25 ±.010
09	16.30	25.00	30.80	11.08
15	24.80	33.30	39.20	19.39
25	38.30	47.04	53.04	33.24
37	54.80	63.50	69.40	49.86

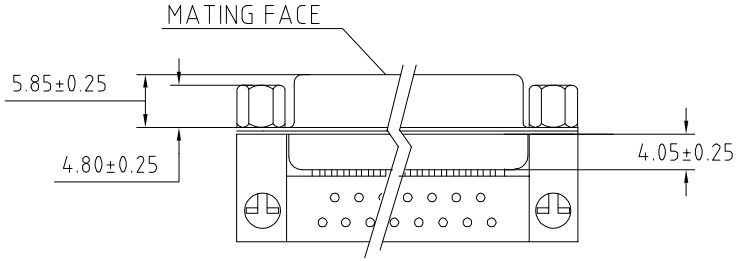

Voltage Current Rating:5 AMP.
Dielectric Withstanding Voltage:1000V AC
Insulation Resistance:5000MΩ Min.
Temperature Range:-25℃ to +85℃

PART NO:
B05-0XX6X14D-02

NO.OF CONTACT:
09 = 9 pos
15 = 15 pos
25 = 25 pos
37 = 37 pos

HOUSING COLOR:
1 = BLACK
5 = WHITE
6 = BLUE

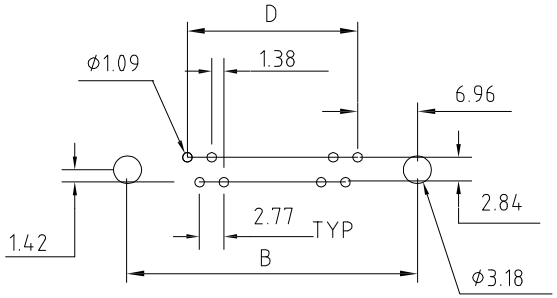

P.C.B LAYOUT

ITEM	DESC.	MATERIAL	REMAKS	PART REMAKS
5	SCREW	STEEL	PALTING:Ni	
4	BOARDLOCK	COPPER ALLOY	PALTING:Ni	
3	HOUSING	PBT+30%GF	COLOR:BLACK	
2	SHELL	SPCC	PALTING:Ni	
1	TERMINAL	COPPER ALLOY	CONTACT AREA:Au 2u" SOLDER AREA:Au 2u" UNDER-PLATING:Ni	

SIDE	DATE	DESCRIPTION	APPROVER
⚠	2011/06/14	NEW ISSUE	JINGLI

QUALITY SYMBOLS
□: CRITICAL
⊠: MAJOR
▽: ZERO DEFECT
▽: S.P.C

Toleance
x. ±0.50
.x ±0.30
.xx ±0.25

NAME:	D-SUB 车针母头90度插板,铆合锁螺丝 (客户用图)				PART NO.	B05-0XX6X14D-02	
REV:	A	UNIT:	mm	DRW BY	CHK BY	APP BY	DRAWING NO.
SCALE:	N:1	DATE:	2011/06/14	JINGLI	KING ZHOU		B05-010

东莞市箐国电子有限公司