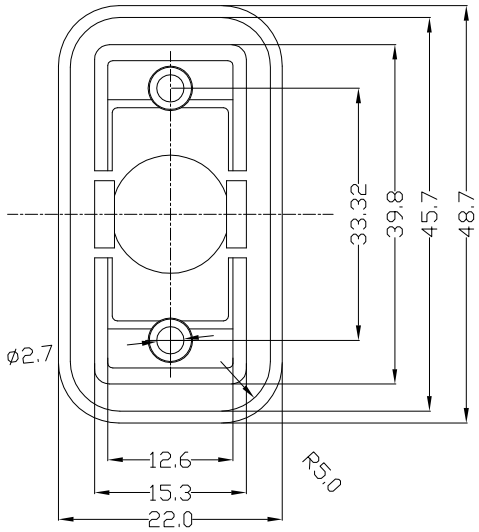

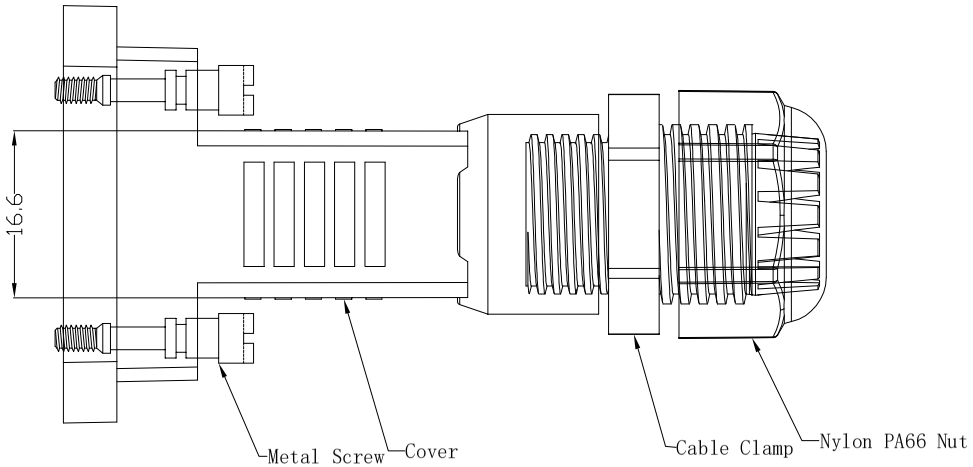

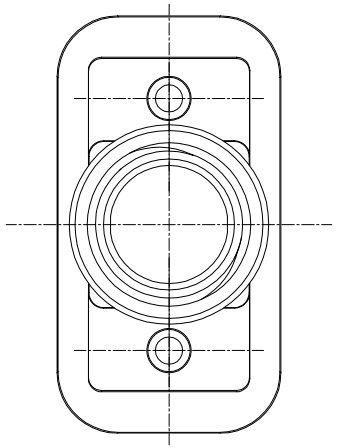

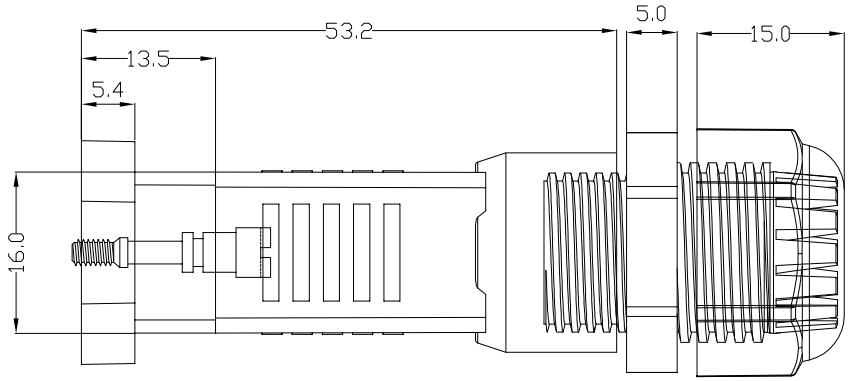

MATERIALS:

- Hood: Plastic PA66
- Waterproof ring: Rubber
- Screw: steel
- RoHS Compliant
- Waterproof grade: IP67

SIDE	DATE	DESCRIPTION	APPROVER
3			
2			
1	2021/09/07	新版发行	King Zhou

QUALITY SYMBOLS
□: CRITICAL ⊠: MAJOR
▽: ZERO DEFECT ▽: S.P.C

Toleance	
x.	±0.50
.x	±0.30
.xx	±0.25

NAME:	D-Sub 15Pin Waterproof Cover				PART NO.	BA5-015N1NN6-01	
REV:	A	UNIT:	mm	DRW BY	CHK BY	APP BY	DRAWING NO.
SCALE:	N:1	DATE:	2021/09/07	DAWN HU	KING ZHOU		

东莞市箐国电子有限公司