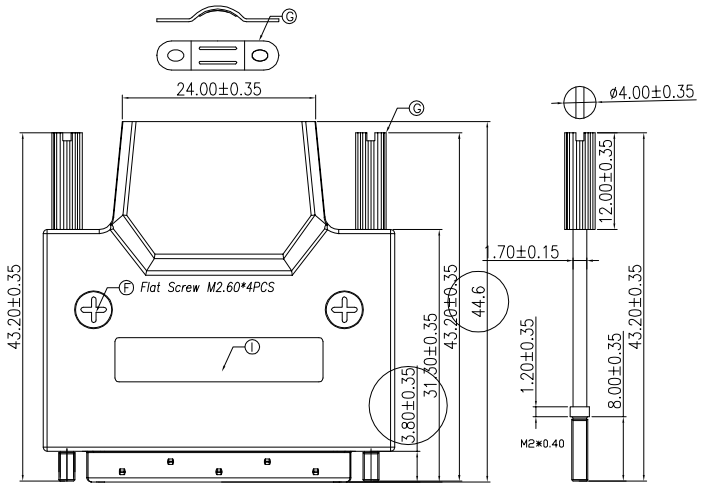

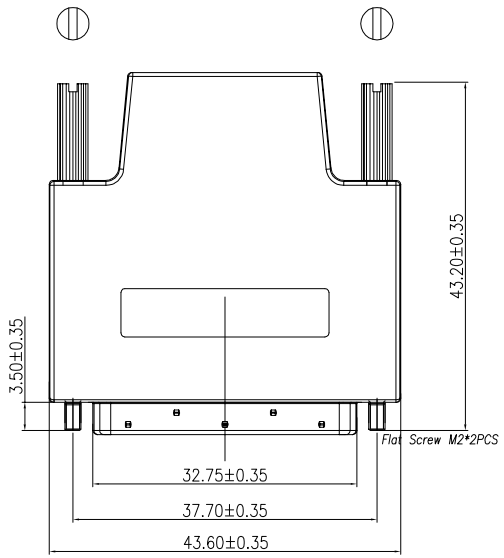

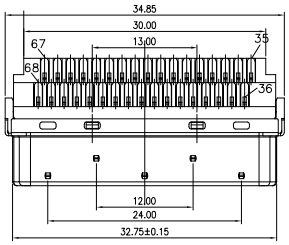

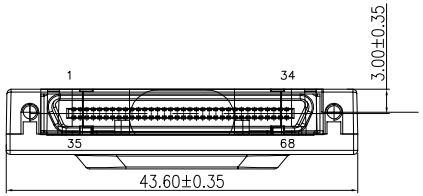

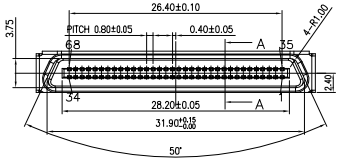

MATERIALS

1. HOUSING : THERMOPLASTIC (UL 94V-0) RATED.
2. COVER : THERMOPLASTIC (UL 94V-0) RATED.
3. TERMINAL : COPPER ALLOY,
   PLATING : GOLD PLATED ON CONTACT AREA,
   TIN PLATED ON SOLDER TAILS.
4. HARPOON : COPPER ALLOY,
   PLATING : TIN PLATED OVERALL.
4. SHELL : SPCC,
   PLATING : NICKEL PLATED OVERALL.

SPECIFICATION

1. CURRENT RATING : 0.3 A. MAX.
2. DIELECTRIC WITHSTANDING VOLTAGE :
   250V AC R.M.S. FOR 1 MINUTE.
3. INSULATION RESISTANCE : >500MΩ MIN.
4. OPERATING TEMPERATURE : -25°C TO +85°C.

ITEM	DESC.	MATERIAL	REMAKS	PART REMAKS
4	COVER	ZINC ALLOY	PLATING: Ni	
3	HOUSING	THERMOPLASTIC	COLOR: BLACK	
2	SHELL	SPCC	PLATING: Ni	
1	TERMINAL	COPPER ALLOY	CONTACT AREA: G/F SOLDER AREA: Sn UNDER-PLATING: Ni	

SIDE	DATE	DESCRIPTION	APPROVER
3			
2			
1	2017/01/16	新版发行	King Zhou

QUALITY SYMBOLS
□: CRITICAL ⊠: MAJOR
▽: ZERO DEFECT ▽: S.P.C

Toleance	
x.	±0.80
.x	±0.50
.xx	±0.25

NAME:	VHDCI-68P Male Sloder Type				PART NO.	B06-068111AA-01	
REV:	A	UNIT:	mm	DRW BY	CHK BY	APP BY	DRAWING NO.
SCALE:	N:1	DATE:	2017/01/16	DAWN HU	KING ZHOU		B06-004

东莞市箐国电子有限公司