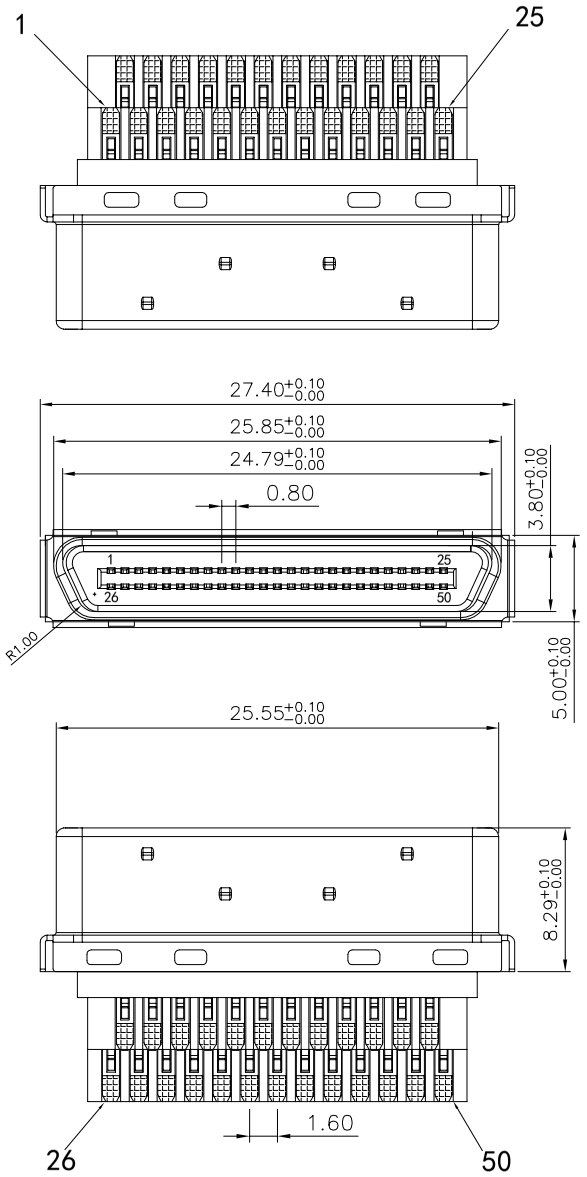

SPECIFICATION:

1.Current Rating: 0.5 AMPS

2.Insulation Resistance:1000MΩMIN. AT 500VDC

3.Dielectric Strength:500V for five second

4.Operation Temperature:(−45°~+85°)

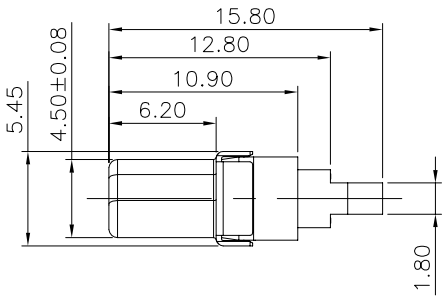

NO.	MATERIAL	QTY	MATERIAL	PLATING & COLOR
E	LONG CONTACT	25	C2680-EH T=0.30mm	GOLD FLASH /AU3U ON CONTACT AREA, 100U"TIN PLATING ON SOLDER TAILS, 80U"ALL OVER NICKEL PLATING.
D	SHORT CONTACT	25		
C	SHELL	1	SPCC T=0.30mm	Ni 80u"Min
B	COVER	1	LCP+15%GF UL94-V0	BLACK
A	INSULATOR	1	LCP+15%GF UL94-V0	BLACK

NAME:	VHDCI-50Pin Male Solder Type 0.8mm			PART NO.	B06-050311A0-01		
REV:	A	UNIT:	mm	DRW BY	CHK BY	APP BY	DRAWING NO.
SCALE:	N:1	DATE:	2018/03/11	Huangmei	Jack Chen		B10-037

SIDE	DATE	DESCRIPTION	APPROVER
A	2018/03/11	NEW ISSUE	Jack Chen

QUALITY SYMBOLS

□: CRITICAL ⊠: MAJOR

▽: ZERO DEFECT ▽c: S.P.C

Toleance

x.	±0.60
.x	±0.40
.xx	±0.25

KinKuo 东莞市箐国电子有限公司

www.KinKuo.com