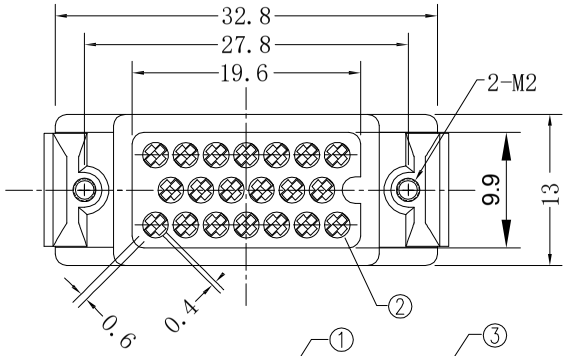

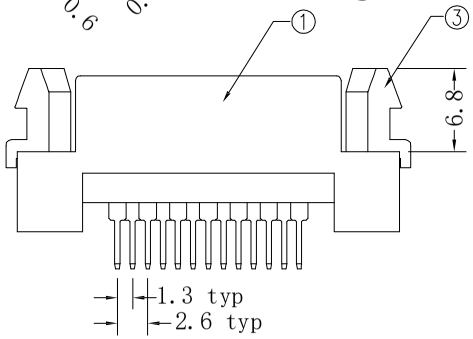

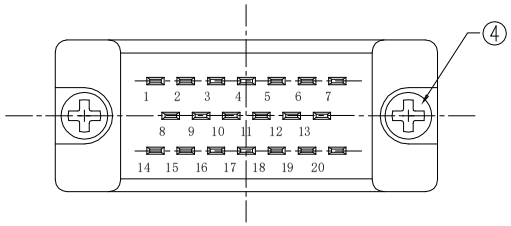

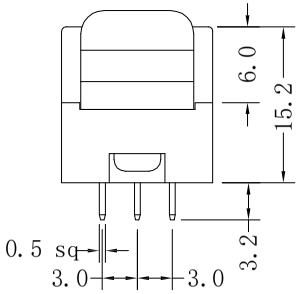

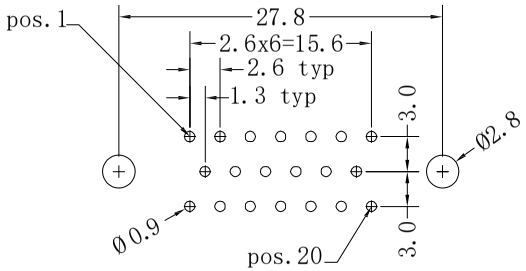

P.C.B Layout

Electrical Characteristics:

Rated voltage: 300V AC / r.m.s
Rated current: 3A / pin
Contact Resistance: 30mΩ max. at DC 100mA
Insulator Resistance: 1000MΩmax. at DC 100mA
Withstanding Voltage: 1000V AC / r.m.s 50Hz For 1 minute
Operating Temperature: -55° ~+105°

ITEM	PART NAME	MATETIALS	NOTE
⑤			
④	Contacts	Phosphor Bronze	Tin Plate Over Nickel
③	Insulator	PBT	UL 94V-0 Blue
②	Locking block	ZINC Alloy	Nickel Plating
①	Small-sized phillips head screw	Spcc	Nickel Plating

SIDE	DATE	DESCRIPTION	APPROVER
⚠	2018/03/11	NEW ISSUE	Jack Chen

QUALITY SYMBOLS
□: CRITICAL
⊠: MAJOR
▽: ZERO DEFECT
▽: S.P.C

Toleance
x. ±0.60
.x ±0.40
.xx ±0.25

PART NAME:	MR-20L Female Servo Connector V/T For PCB				PART NO:	B01-MR20FLVT-01	
REV:	A	UNIT:	mm	DRW BY	CHK BY	APP BY	DRAWING NO.
SCALE:	N:1	DATE:	2018/03/11	Huangmei	Jack Chen		MR-20L

KinKuo 东莞市箐国电子有限公司
www.KinKuo.com